Distributed European Infrastructure for Supercomputing Applications

DEISA and GPFS in DEISA

Andreas Schott, Technical Coordinator
RZG, Andreas.Schott@rzg.mpg.de

www.deisa.eu

SP-XXL, Makena
January 13th, 2009

RI-222919

Overview

Distributed European Infrastructure for Supercomputing Applications

- Resources on National Supercomputers
  - 11 Sites in 7 European Countries
- Connected mostly via 10Gbit/s by GÈANT
  - Central Switch in Frankfurt/Germany
- Providing Common Access
  - Certificates and Common Name Range
- Common Software and Middleware
  - Binaries, Libraries, Batch, Unicore, (GT4)
- User Environment and Application Support

RI-222919

History and Future

- Planning from 2002
  - European Need for Supercomputing (ESFRI)
- Starting 2004 with 8 partners
  - CINECA (IT), CSC (FI), ECMWF (UK), EPCC (UK), FZJ (DE), IDRIS (FR), RZG (DE), SARA (NL)
- Extending 2005 to 11 partners
  - BSC (ES), HLRS (DE), LRZ (DE)
- Continuing 2008 with 11 partners
  - Project DEISA2
- Adding Associate Partners in 2008 and later
  - CEA (FR), CSCS (CH), PDC/KTH (SE), JRSS (RU)
- PRACE provides the legal entity for the persistent European Supercomputing based on DEISA technology

new "petaflop" supercomputers

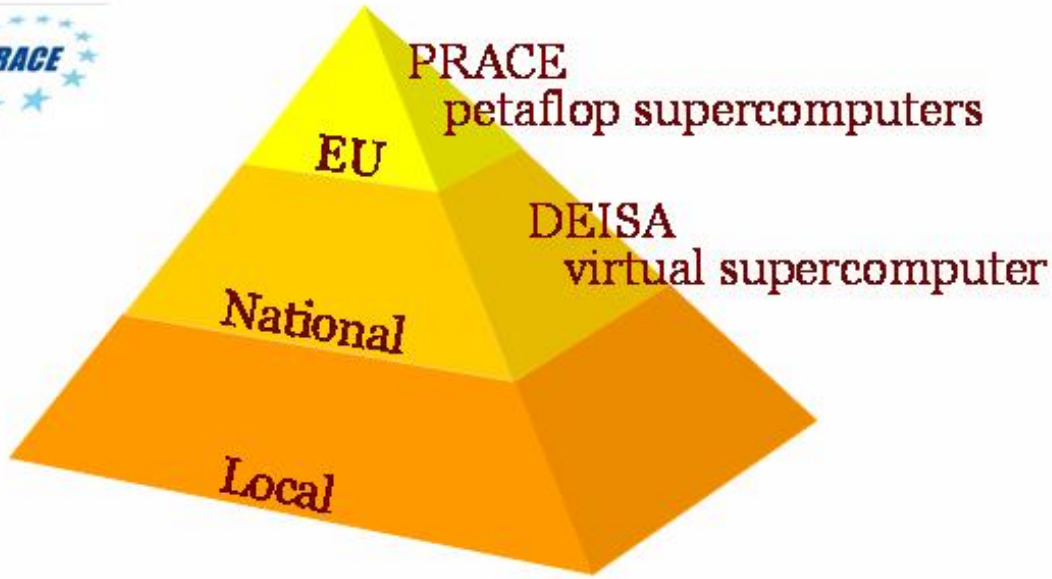

Mario Campolargo, OGF23, June 2008

Essentials of DEISA2 Project

- Consolidation of the existing DEISA infrastructure
- Evolvement of this European infrastructure towards a robust and persistent European HPC ecosystem
- Enhancing the existing services, by deploying new services including support for European Virtual Communities, and by cooperating and collaborating with new European initiatives, especially PRACE
- DEISA2 as the vector for the integration of Tier-0 and Tier-1 systems in Europe
- To provide a lean and reliable turnkey operational solution for a persistent European HPC ecosystem
- Bridging worldwide HPC projects: To facilitate the support of international science communities with computational needs traversing existing political boundaries

RI-222919

DEISA Key Strategies

- Deployment of global file systems across Europe
- Unified and seamless access to supercomputing resources throughout Europe
- Europe-wide support for enabling of grand challenge applications
- DEISA Extreme Computing Initiative DECI

RI-222919

DEISA Extreme Computing Initiative

Distributed European Infrastructure for Supercomputing Applications

DECI call 2005

51 proposals, 12 European countries involved, co-investigator from US)
30 mio cpu-h requested
29 proposals accepted, 12 mio cpu-h awarded (normalized to IBM P4+)

DECI call 2006

41 proposals, 12 European countries involved
co-investigators from N + S America, Asia (US, CA, AR, ISRAEL)
28 mio cpu-h requested
23 proposals accepted, 12 mio cpu-h awarded (normalized to IBM P4+)

DECI call 2007

63 proposals, 14 European countries involved, co-investigators from
N + S America, Asia, Australia (US, CA, BR, AR, ISRAEL, AUS)
70 mio cpu-h requested
45 proposals accepted, ~30 mio cpu-h awarded (normalized to IBM P4+)

DECI call 2008

66 proposals, 15 European countries involved, co-investigators from
N + S America, Asia, Australia
134 mio cpu-h requested (normalized to IBM P4+)
Evaluation in progress

RI-222919

DEISA Extreme Computing Initiative

Distributed European Infrastructure for Supercomputing Applications

Involvements in projects from DECI calls 2005, 2006, 2007:

157 research institutes and universities

from

15 European countries

Austria	Finland	France	Germany	Hungary
Italy	Netherlands	Poland	Portugal	Romania
Russia	Spain	Sweden	Switzerland	UK

with collaborators from

four other continents

North America, South America, Asia, Australia

RI-222919

Evolution of User Categories in DEISA

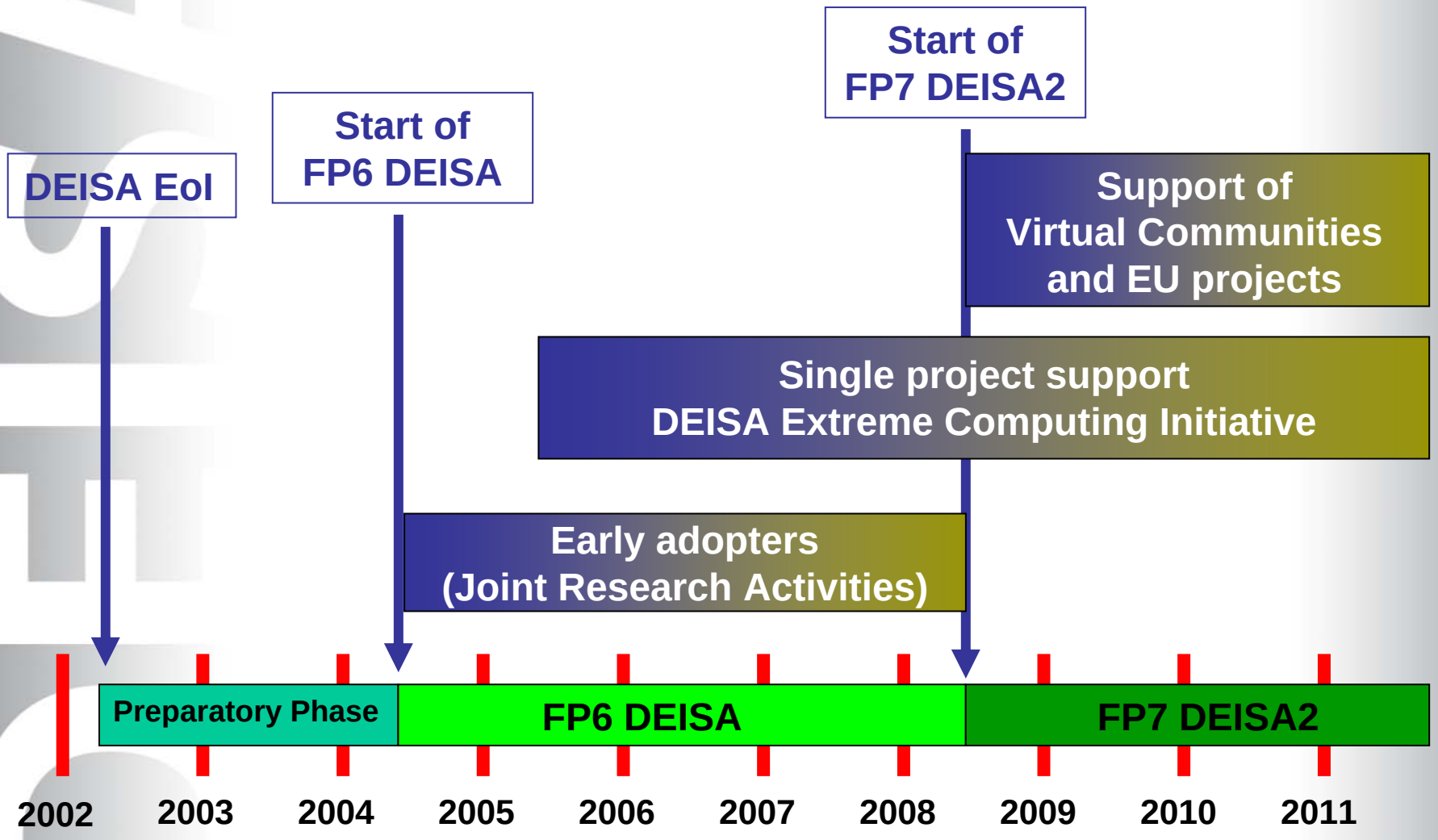

RI-222919

DEISA Partners

Distributed European Infrastructure for Supercomputing Applications

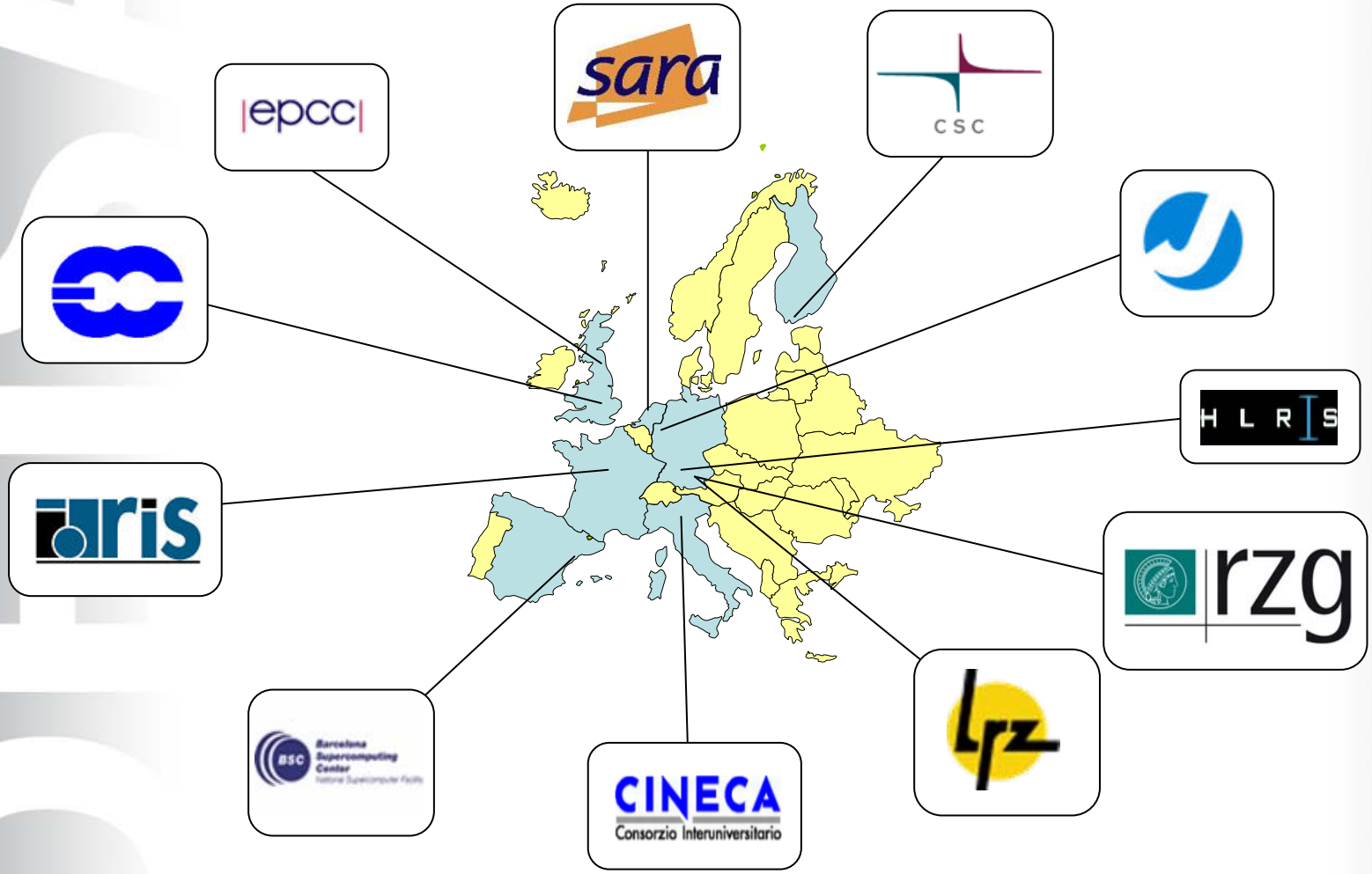

RI-222919

Current Hardware in DEISA

- Cray XT-4/5 with Linux (CSC, EPCC)
- IBM-PowerPC with Linux (BSC)
- IBM-Power4 with AIX (EPCC)
- IBM-Power5 with AIX (CINECA)
- IBM-Power6 with AIX (ECMWF, FZJ, IDRIS, RZG)
- IBM-Power6 with Linux (SARA)
- IBM-BlueGene/P with Linux (FZJ, IDRIS, RZG)
- NEC-SX8 with Super-UX (HLRS)
- SGI-Altix with Linux (LRZ)

RI-222919

Core Infrastructure and Services

Distributed European Infrastructure for Supercomputing Applications

Dedicated High Speed Network

Common AAA

- Single sign on
- Accounting/budgeting

Global Data Management

- High performance remote I/O and data sharing with global file systems
- High performance transfers of large data sets

User Operational Infrastructure

- Distributed Common Production Environment (DCPE)
- Job management service
- Common user support and help desk

System Operational Infrastructure

- Common monitoring and information systems
- Common system operation

Global Application Support

RI-222919

Constraints

Highest Priority: local stability

- 95% of the jobs are non-DEISA

Ease of use for the users

- global transparent file access
  - /deisa/{home,data,scratch}/<group>/<user>
  - $DEISA_HOME, $DEISA_DATA, $DEISA_SCRATCH
- standardized software stack and use (DCPE)
  - libraries
  - binaries (shells, interpreters, compilers)
- unified access batch access (UNICORE)
- interactive login (new in DEISA2)

Costs

- 850k€/year for the 10Gbit Network
- GPFS License and Maintenance

RI-222919

GPFS in DEISA

Starting with GPFS v2.3 and v2.4

- not a real MC-GPFS
- no root squash
- pair-wise communication
- no flow control
- problems with latencies
- problems with lost packets
- avoided uid mapping

RI-222919

GPFS in DEISA

Upgrade to GPFS v3.1

- incompatibility with v2
- lost integration of some partners
- much more stable
- new problems
- critical situation beginning of 2008
- planning for complete restructuring
- improvements by upgrade to 10Gbit/s network

Upgrade to GPFS v3.2

- more stability

RI-222919

GPFS Integration Timeline

Distributed European Infrastructure for Supercomputing Applications

EPCC (UK)
Power4 / AIX

SARA (NL)
Power6 / Linux

CSC (FI)
Cray XT4/5 - Linux

EPCC (UK)
Cray XT4/5 - Linux

FZJ (DE)
BlueGeneP / Linux
Power6 / AIX

ECMWF (GB)
Power6 / AIX

HLRS (DE)
NEC-SX8 / SuperUX

IDRIS (FR)
BlueGeneP / Linux
Power6 / AIX

RZG (DE)
BlueGeneP / Linux
Power6 / AIX

BSC (ES)
PowerPC / Linux

CINECA (IT)
Power5 / AIX

LRZ (DE)
Altix / Linux

/deisa

Initial Planning October 2004

Now October 2005

Fall 2 ... y 2006

July ... ly 2006

Februa... ptember 2006

September 2007 February 2007

July 2007

RI-222919

DEISA – Network Logical View

Distributed European Infrastructure for Supercomputing Applications

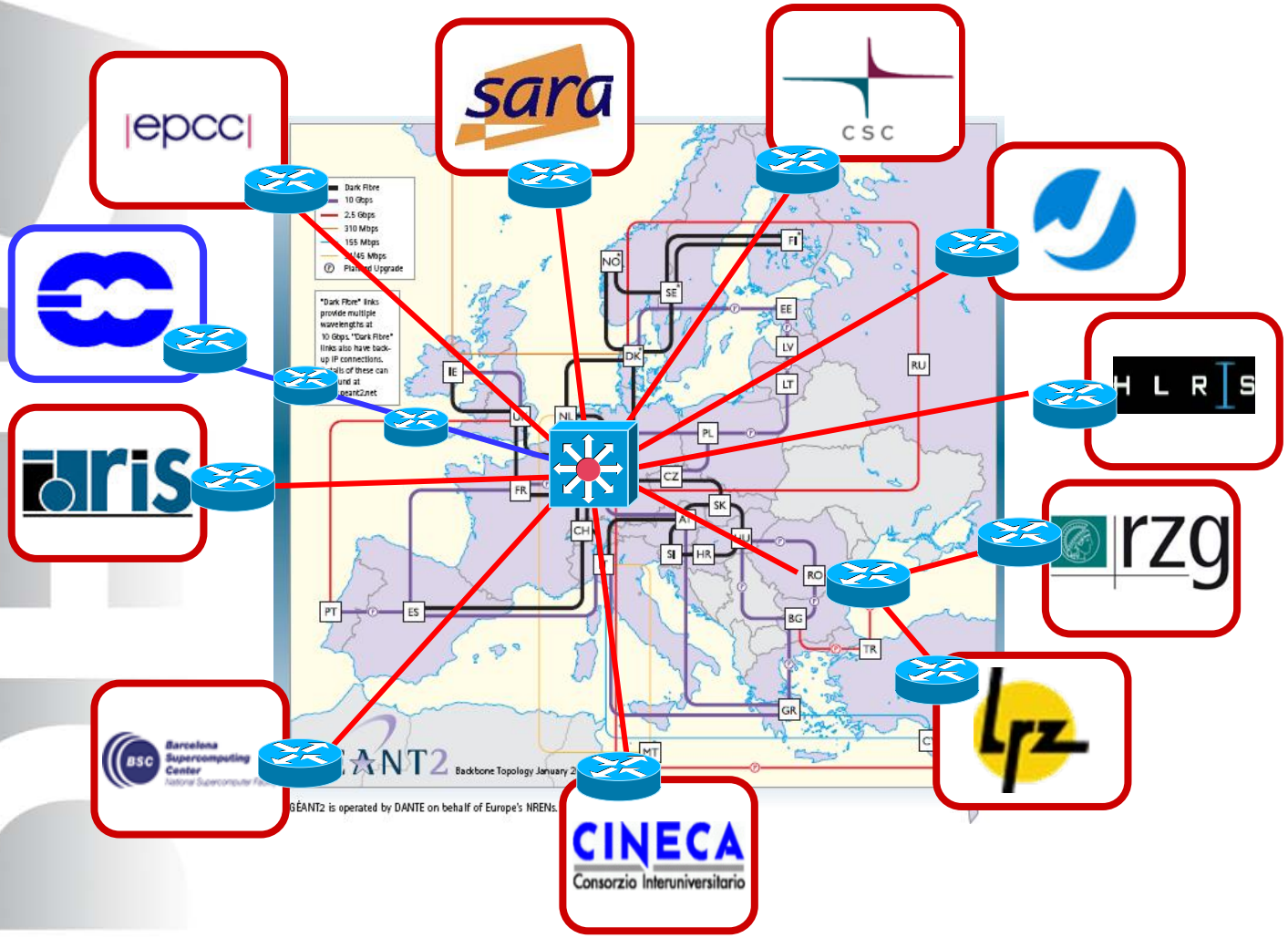

NRENs involved:

DFN
Nordunet/FUNET
GARR
RedIRIS
RENATER
SURFnet
UKERNA

Dedicated 10 Gb/s wavelength

1 Gb/s LSP

GRE-Tunnel

RI-222919

DEISA – Network Technical View

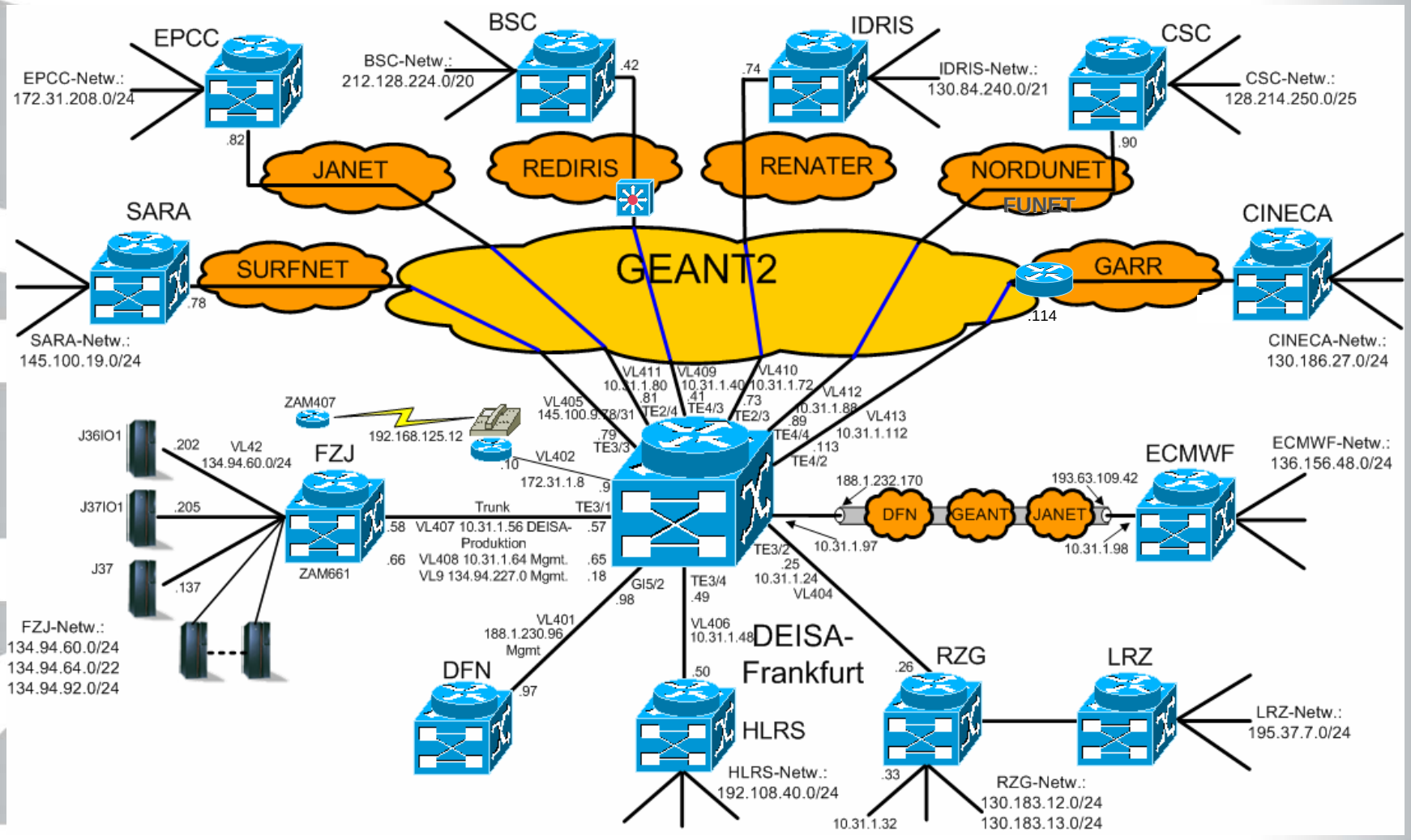

RI-222919

Overall GPFS Configuration

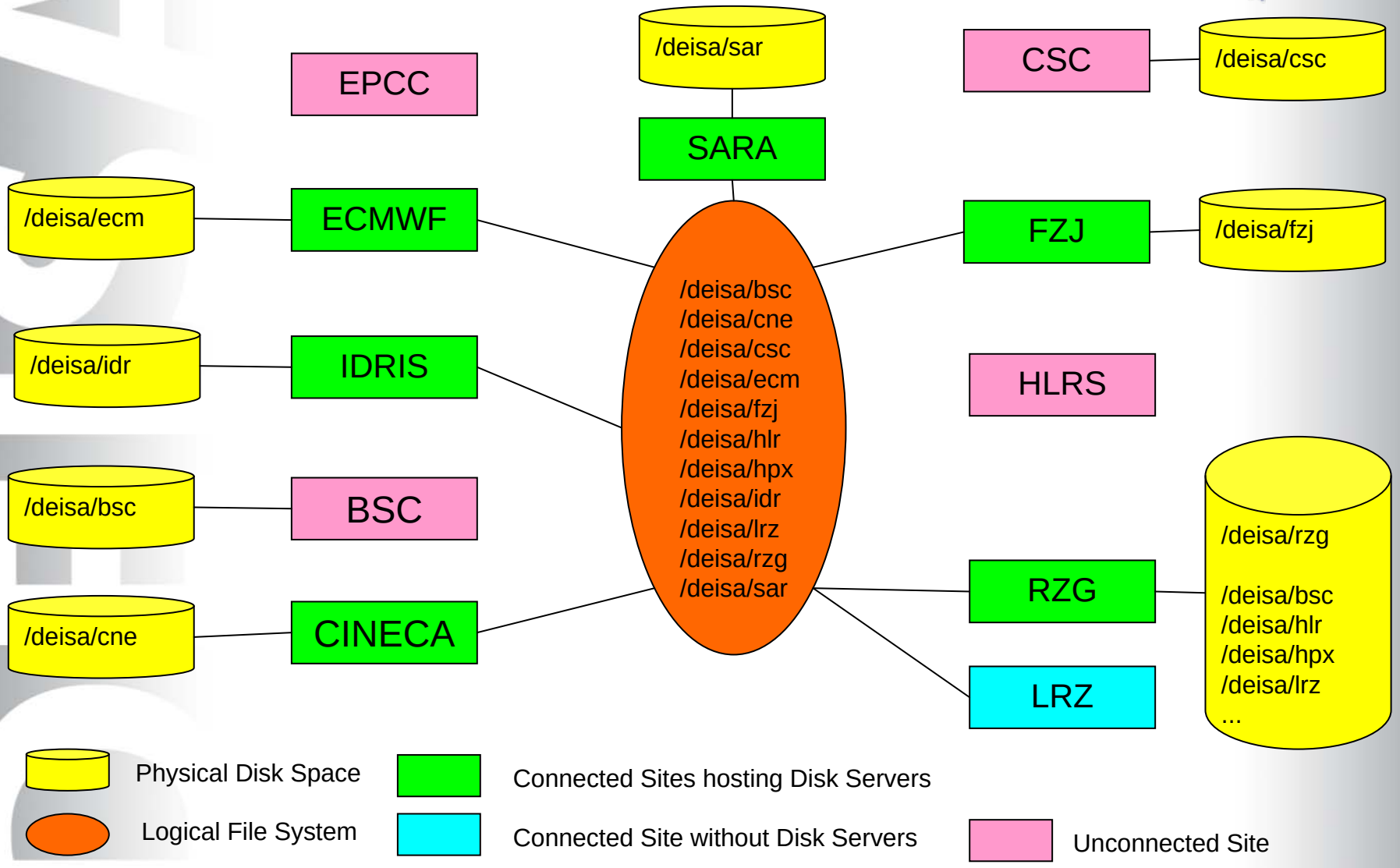

RI-222919

Planning / Considered Options

- Treatment of BG and alike systems
  - gateway nodes
- Centralized GPFS Servers
  - with mirroring
  - more unique HW and performance
  - better support
- Intermediate Clients
  - as local exporters (NFS)
- pNFS
  - pNFS access to GPFS
  - Panache (WAN-caching GPFS)
  - pNFS on other local parallel filesystems (Lustre)
- other options ?

RI-222919

GPFS-Configurations: LRZ

SGI: Altix 4700 (Montecito)
OS: SLES10 SP1
GPFS: 3.1.0.20

Local FS: CXFS
DEISA FS: none

Internal Network:
10Gbit/s
External Network:
10Gbit/s
DEISA Uplink:
10Gbit/s

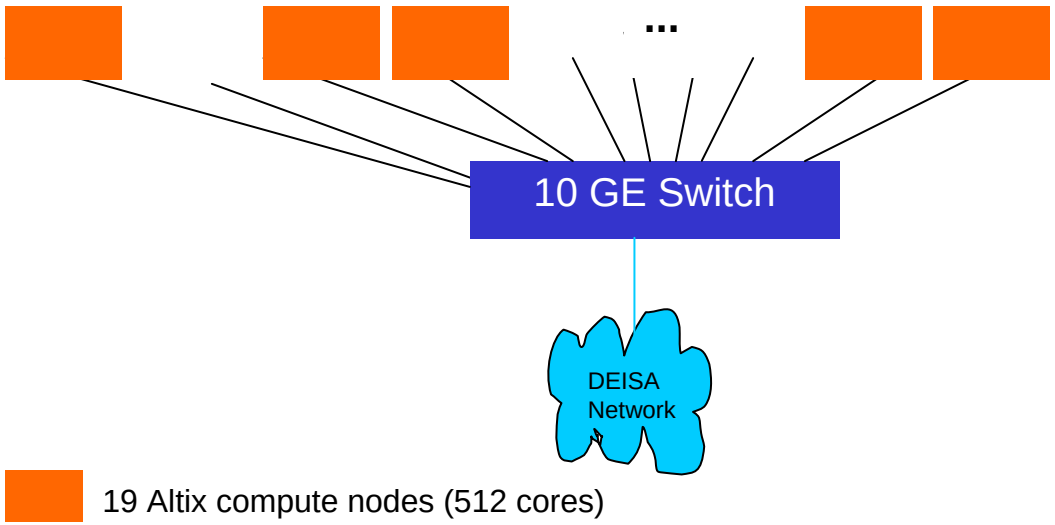

RI-222919

GPFS-Configurations: CSC

Cray: XT4 (Opteron)
OS: Catamount
GPFS: 3.1.0.16

Local FS: Lustre
DEISA FS: MC-GPFS
    PPC, AIX 5.3, GPFS 3.1.0.14

Internal Network:
    10Gbit/s
External Network:
    10Gbit/s (n for XT4)
DEISA Uplink:
    10Gbit/s

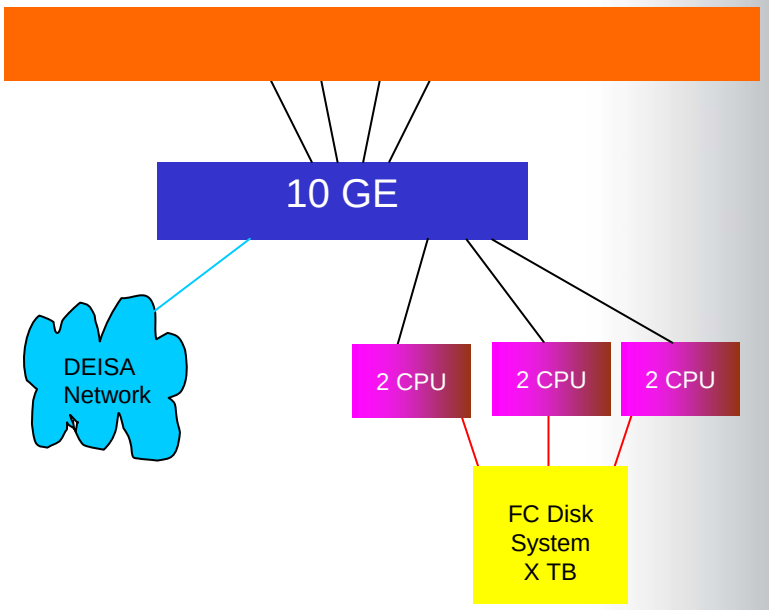

Cray XT4

I/O 3 nodes with 1 MC-GPFS for DEISA

RI-222919

GPFS-Configuration: RZG

IBM: Power6
OS: AIX 5.3
5300-08
GPFS: 3.2.1.6

Local FS: NSD
DEISA FS: NSD

Internal Network:
Infiniband
External Network:
10Gbit/s
DEISA Uplink
10Gbit/s

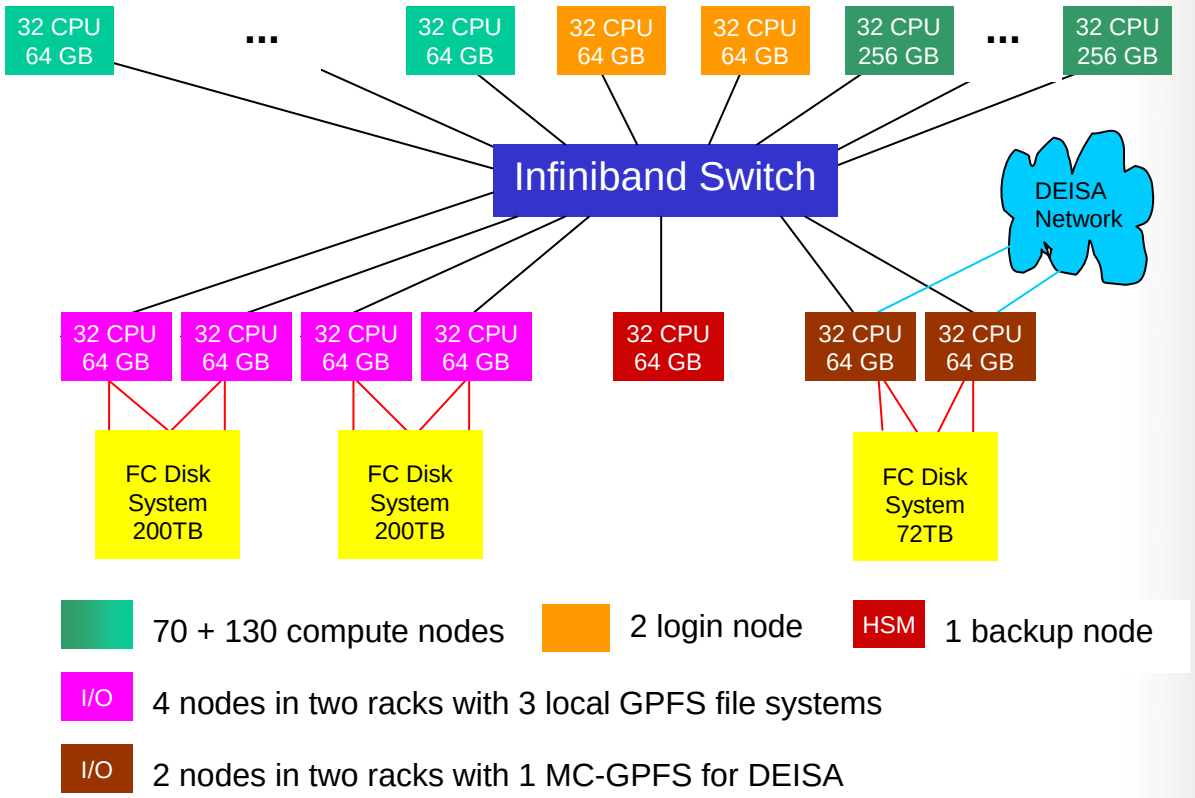

RI-222919

RZG – Network

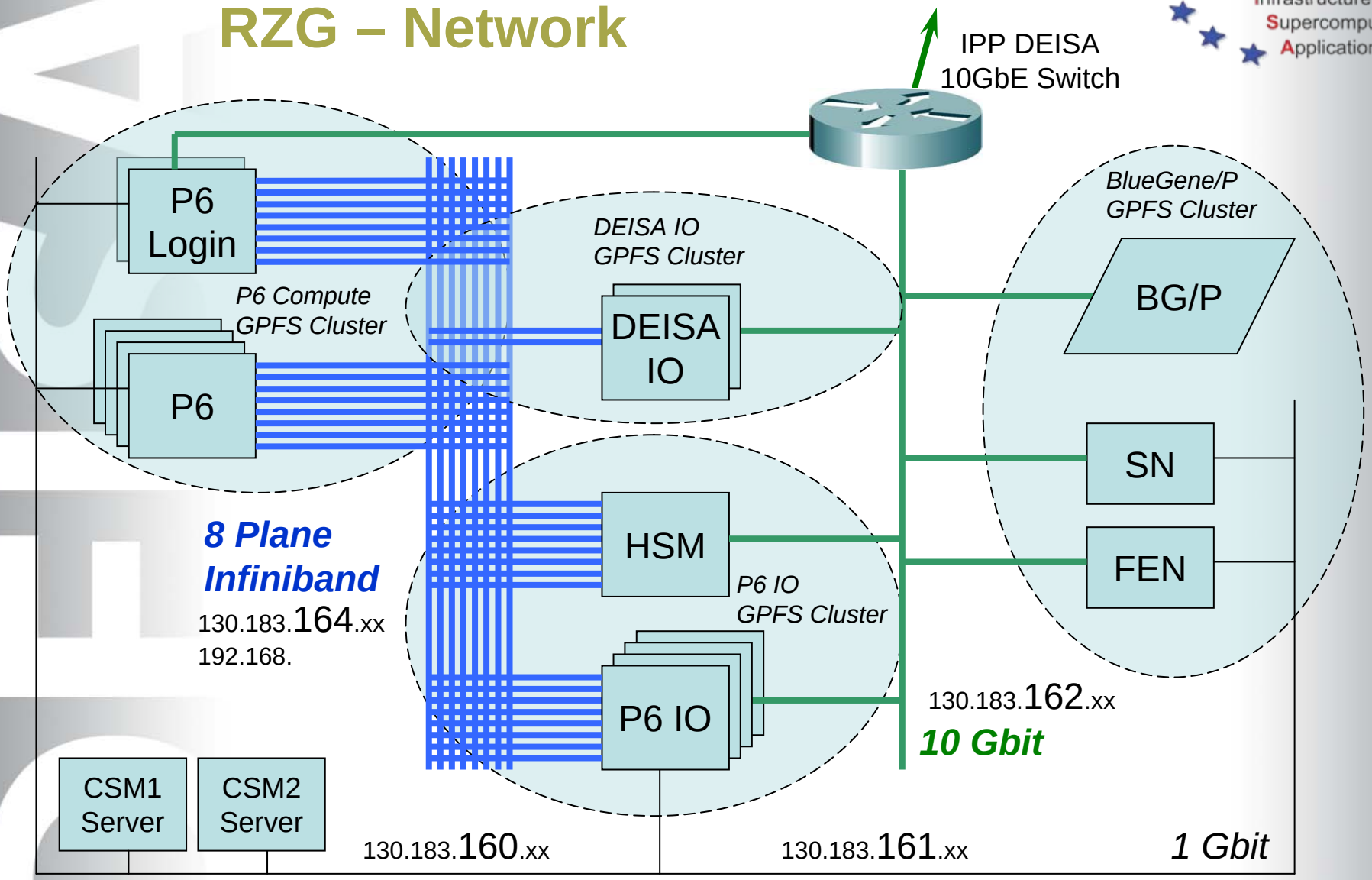

RI-222919

DEISA - Essentials

Distributed European Infrastructure for Supercomputing Applications

- DEISA has established a systematic network of cooperation of major supercomputing centres in Europe and operates a powerful supercomputing grid on top of national services.
- DEISA provides a collaborative environment for capability computing and data management, and also support for application enabling for complex and extreme computing.
- DEISA paves the way towards usage of the most adequate supercomputer architectures and towards usage of the most powerful supercomputers, for the benefit of European researchers and the advancement of science.
- Many of the services deployed will enable the efficient integration of future European petascale systems into a seamless European HPC ecosystem.

RI-222919

Questions? DEISA

Distributed European Infrastructure for Supercomputing Applications

RI-222919